PNP Silicon Epitaxial Planar Transistor

for switching and interface circuit and drive circuit applications

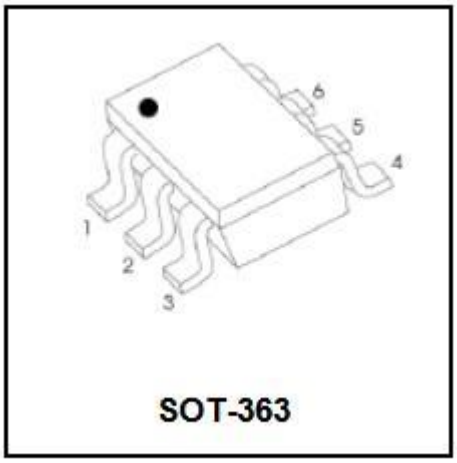

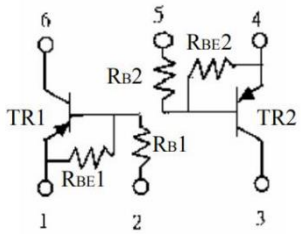

Resistor Values

Type	R1 (K)	R2 (K)	MARKING
MMUN5111DW	10	10	0A
MMUN5112DW	22	22	0B
MMUN5113DW	47	47	0C
MMUN5114DW	10	47	0D
MMUN5115DW	10	∞	0E
MMUN5116DW	4.7	∞	0F
MMUN5130DW	1	1	0G
MMUN5131DW	2.2	2.2	0H
MMUN5132DW	4.7	4.7	0J
MMUN5133DW	4.7	47	0K
MMUN5134DW	22	47	0L
MMUN5135DW	2.2	47	0M

Absolute Maximum Ratings (T_a = 25 °C)

Parameter	Symbol	Value	Unit
Collector Base Voltage	$-V_{CBO}$	50	V
Collector Emitter Voltage	$-V_{CEO}$	50	V
Collector Current	$-I_C$	100	mA
Total Power Dissipation	P_{tot}	200	mW
Junction Temperature	T_j	150	°C
Storage Temperature Range	T_S	- 55 to + 150	°C

ELECTRICAL CHARACTERISTICS (T_A = 25°C unless otherwise noted)

Characteristic		Symbol	Min	Typ	Max	Unit
OFF CHARACTERISTICS						
Collector–Base Cutoff Current (V_{CB} = 50 V, I_E = 0)		I_{CBO}	–	–	100	nAdc
Collector–Emitter Cutoff Current (V_{CE} = 50 V, I_B = 0)		I_{CEO}	–	–	500	nAdc
Emitter–Base Cutoff Current (V_{EB} = 6.0 V, I_C = 0)	MUN5111DW	I_{EBO}	–	–	0.5	mAdc
	MUN5112DW		–	–	0.2	
	MUN5113DW		–	–	0.1	
	MUN5114DW		–	–	0.2	
	MUN5115DW		–	–	0.9	
	MUN5116DW		–	–	1.9	
	MUN5130DW		–	–	4.3	
	MUN5131DW		–	–	2.3	
	MUN5132DW		–	–	1.5	
	MUN5133DW		–	–	0.18	
	MUN5134DW		–	–	0.13	
	MUN5135DW		–	–	0.2	
Collector–Base Breakdown Voltage (I_C = 10 μA, I_E = 0)		$V_{(BR)CBO}$	50	–	–	Vdc
Collector–Emitter Breakdown Voltage (Note 4) (I_C = 2.0 mA, I_B = 0)		$V_{(BR)CEO}$	50	–	–	Vdc
ON CHARACTERISTICS (Note 4)						
DC Current Gain (V_{CE} = 10 V, I_C = 5.0 mA)	MUN5111DW	h_{FE}	35	60	250	
	MUN5112DW		60	100	–	
	MUN5113DW		80	140	–	
	MUN5114DW		80	140	–	
	MUN5115DW		160	250	–	
	MUN5116DW		160	250	–	
	MUN5130DW		3.0	5.0	–	
	MUN5131DW		8.0	15	–	
	MUN5132DW		15	27	–	
	MUN5133DW		80	140	–	
	MUN5134DW		80	130	–	
	MUN5135DW		80	140	–	
Collector–Emitter Saturation Voltage (I_C = 10 mA, I_E = 0.3 mA) (I_C = 10 mA, I_B = 5 mA) MUN5130DW/MUN5131DW (I_C = 10 mA, I_B = 1 mA) MUN5132DW/MUN5134DW		$V_{CE(sat)}$	–	–	0.25	Vdc
Output Voltage (on) (V_{CC} = 5.0 V, V_B = 2.5 V, R_L = 1.0 kΩ)	MUN5111DW	V_{OL}	–	–	0.2	Vdc
	MUN5112DW		–	–	0.2	
	MUN5114DW		–	–	0.2	
	MUN5115DW		–	–	0.2	
	MUN5116DW		–	–	0.2	
	MUN5130DW		–	–	0.2	
	MUN5131DW		–	–	0.2	
	MUN5132DW		–	–	0.2	
	MUN5133DW		–	–	0.2	
	MUN5134DW		–	–	0.2	
	MUN5135DW		–	–	0.2	
(V_{CC} = 5.0 V, V_B = 3.5 V, R_L = 1.0 kΩ)	MUN5113DW		–	–	0.2	
			–	–		

1. Pulse Test: Pulse Width < 300 μs, Duty Cycle < 2.0%

ELECTRICAL CHARACTERISTICS (T_A = 25°C unless otherwise noted) (Continued)

Characteristic	Symbol	Min	Typ	Max	Unit
Output Voltage (off) (V_{CC} = 5.0 V, V_B = 0.5 V, R_L = 1.0 kΩ) (V_{CC} = 5.0 V, V_B = 0.050 V, R_L = 1.0 kΩ) MUN5130DW (V_{CC} = 5.0 V, V_B = 0.25 V, R_L = 1.0 kΩ) MUN5115DW MUN5116DW/ MUN5131DW/ MUN5132DW	V_{OH}	4.9	–	–	Vdc
Input Resistor MUN5111DW MUN5112DW MUN5113DW MUN5114DW MUN5115DW MUN5116DW MUN5130DW MUN5131D W MUN5132DW MUN5133DW MUN5134DW MUN5135DW	R1	7.0 15.4 32.9 7.0 7.0 3.3 0.7 1.5 3.3 3.3 15.4 1.54	10 22 47 10 10 4.7 1.0 2.2 4.7 4.7 22 2.2	13 28.6 61.1 13 13 6.1 1.3 2.9 6.1 6.1 28.6 2.86	kΩ
Resistor Ratio MUN5111DW/MUN5112DWMUN5113DW/ MUN5136DW MUN5114DW MUN5115DW/MUN5116DW MUN5130DW/MUN5131DW/MUN5132DW MUN5133DW MUN5134DW MUN5135DW	R_1/R_2	0.8 0.17 – 0.8 0.055 0.38 0.038	1.0 0.21 – 1.0 0.1 0.47 0.047	1.2 0.25 – 1.2 0.185 0.56 0.056	

Characteristic Curves

Current Gain vs Output Current

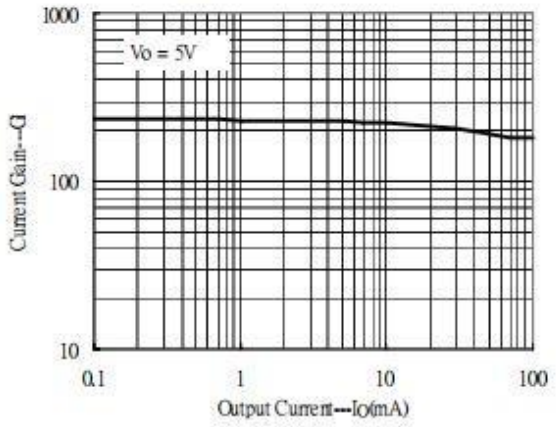

Output Voltage vs Output Current

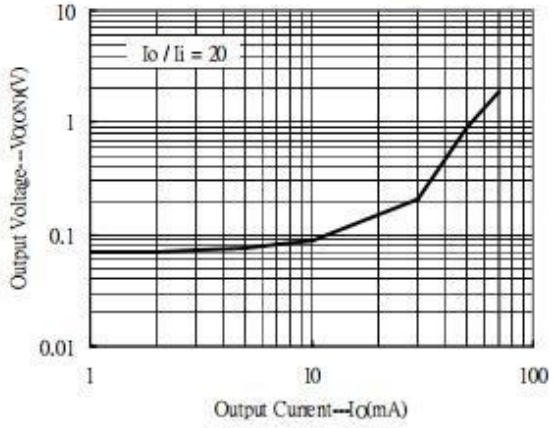

Input Voltage vs Output Current(ON characteristics)

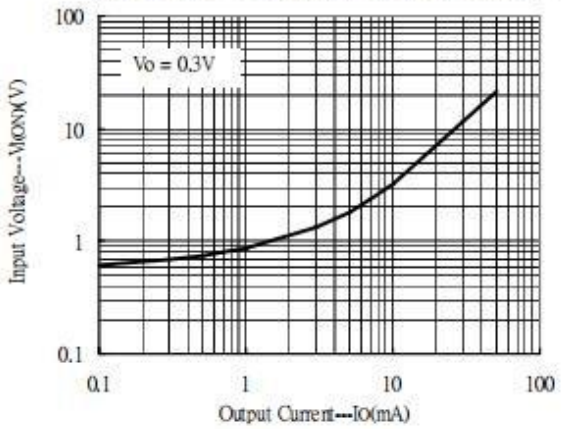

Output Current vs Input Voltage(OFF characteristics)

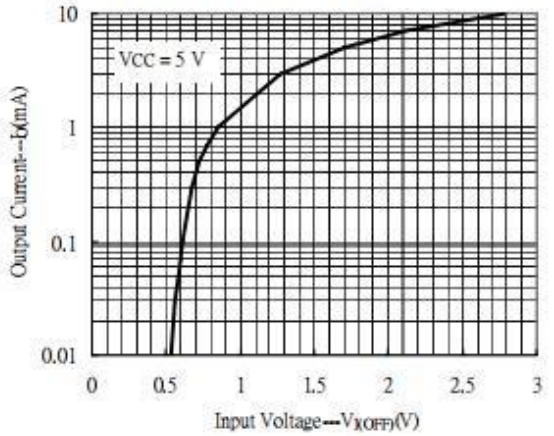

Power Derating Curves

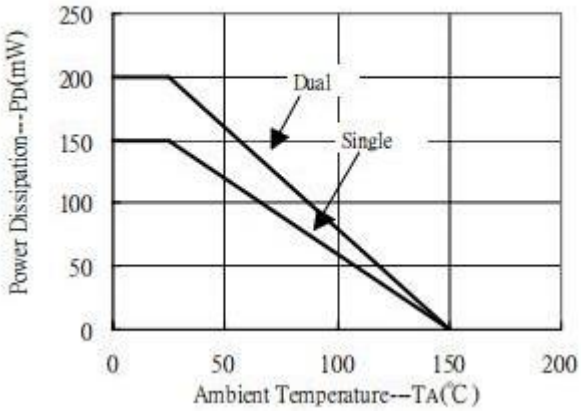

SOT-363 Package Outline Dimensions

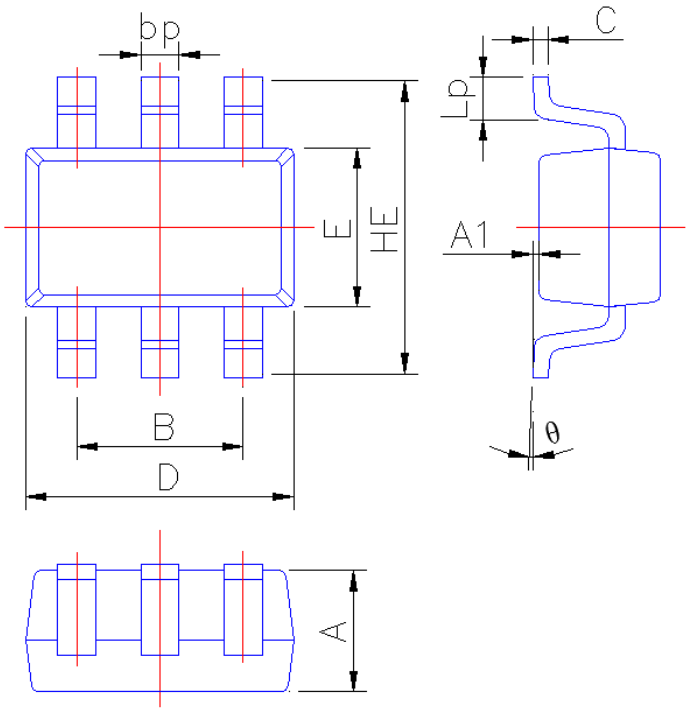

Symbol	Dimension in Millimeters	
	Min	Max
A	0.90	1.00
A1	0.010	0.100
B	1.20	1.40
bp	0.25	0.45
C	0.09	0.15
D	2.00	2.20
E	1.15	1.35
HE	2.15	2.55
Lp	0.25	0.46
θ	0°	6°